THERMAL-GRIP®

MODEL IP50D

GAS INSULATION NAILER

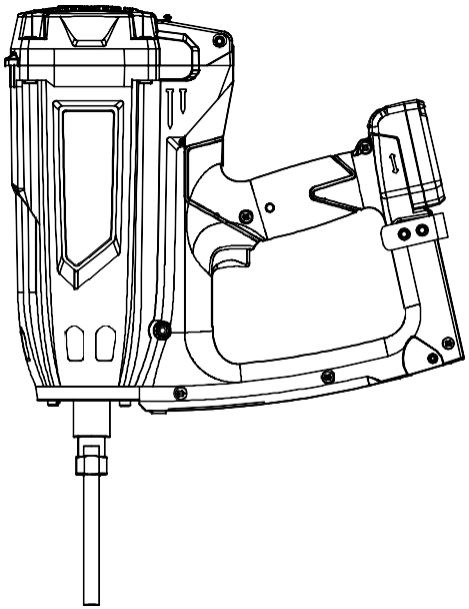

SAFETY OPERATION MANUAL

IMPORTANT INFORMATION TO READ BEFORE OPERATION.

Read and understand tool labels and all operating instructions, safety precautions and warnings in this manual before operating or maintaining this tool.

Failure to follow warnings could result in DEATH or SERIOUS INJURY.

Most accidents that result from the operation and maintenance of Nailers are caused by the failure to observe basic safety rules or precautions. An accident can often be avoided by recognizing a potentially hazardous situation before it occurs, and by observing appropriate safety procedures.

Basic safety precautions are outlined in the "SAFETY" section of this Manual

Hazards that must be avoided to prevent bodily injury or machine damage are identified by DANGERS and WARNINGS on the Nailer and in this Manual

Never use this Nailer for applications other than those specified in this Manual.

SAFETY

IMPORTANT SAFETY INSTRUCTIONS FOR USING NAILERS

READ ALL INSTRUCTIONS

This Nailer is powered by an internal combustion device.
This Nailer shall only be used with dispensers for combustible gas which are listed in this manual.

DANGER

1. OPERATORS AND OTHERS IN WORK AREA MUST WEAR SAFETY GLASSES WITH SIDE SHIELDS.

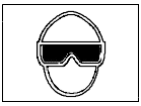

When operating the Nailer, always wear safety glasses with side shields, and make sure others in work area wear safety glasses.

2. NEVER USE IN PRESENCE OF FLAMMABLE LIQUIDS OR GASES.

This Nailer must not be used in a combustible environment or in presence of flammable liquids or gases, e.g. lacquer, paint, benzine, thinner or gasoline.
This Nailer produces hot exhaust gases that may ignite flammable materials and produces sparks during operation.

3. DO NOT TOUCH AROUND THE EXHAUST OUTLET.

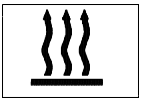

This Nailer produces hot exhaust gases that may flammable materials. The push lever and nose will become hot and get heated up after prolonged or rapid use.
Do not touch with bare hands.

4. EXPLOSION AND FIRE HAZARD.

The fuel cell is an aerosol dispenser with flammable contents.
Pressured container and the propellant will remain in the fuel cell.
Faillure to follow instructions may result in explosion or fire.

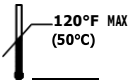

Keep the Nailer, fuel cells and battery away from temperatures exceeding 120°F (50°C).
Fuel cell and/or battery may burst, releasing flammable gas.
Do not pierce or burn the container, even after use.
Do not incinerate, refill, reclaim or recycle the fuel cell.
Do not spray into a flame or any incandescent material.

Keep away from ignition sources
No smoking.
Keep out of the reach of children.

WARNING

5. NEVER POINT TOOL AT YOURSELF OR OTHERS IN WORK AREA.

Always assume the Nailer contains fasteners.
Never point the Nailer at yourself or others, whether it contains fasteners or not.
If fasteners are mistakenly driven, it can lead to severe injuries.

6. KEEP FINGERS AWAY FROM TRIGGER WHEN NOT DRIVING FASTENERS TO AVOID ACCIDENTAL FIRING.

Never carry the Nailer with finger on trigger since you could drive a fastener unintentionally and injure yourself or someone else.
Always carry the Nailer by the handle only.

7. **ALWAYS WEAR EAR AND HEAD PROTECTION.**

Always wear ear protection to protect your ears.
Always wear head protection to protect your head from flying objects.

8. USE OUTSIDE OR WELL-VENTILATED AREAS.

This Nailer shall not be used in enclosed or poorly ventilated areas.
This Nailer exhausts carbon monoxide which is a danger to health when inhaled.
Do not inhale.

9. STORE NAILER PROPERLY WITH FUEL CELL AND BATTERY REMOVED.

When not in use, the Nailer, fuel cell and battery should be stored in tool case and in a dry place.
Store indoors at temperature41°F(5°C)～77°F（25°C）.
Keep the Nailer, fuel cell and battery out of direct sunlight and out of vehicle.
Keep out of reach of children.

10. KEEP WORK AREA CLEAR.

11. DRESS PROPERLY.

Always wear proper protective clothing on jobsite.

12. KEEP ALL SCREWS AND COVERS TIGHTLY IN PLACE.

Keep all screws and covers tightly mounted.
Check their condition periodically.
Never use the Nailer if parts are missing or damaged.

13. DO NOT LOAD FASTENERS WITH TRIGGER OR PUSH LEVER DEPRESSED.

When loading fasteners into the Nailer,
1) do not depress the trigger;
2) do not depress the push lever;
3) keep the Nailer pointed downward.

14. KEEP FACE, HANDS AND FEET AWAY FROM FIRING HEAD DURING USE.

Never place your face, hands or feet closer than 8 inches (200 mm) from the firing head.
A serious injury can result if the fasteners are deflected by the workpiece, or are driven away from the point of entry.

15. **PLACE NAILER PROPERLY ON WORKPIECE.**

Do not drive fasteners on top of other fasteners or with the Nailer at too steep of an angle.

16. CHECK FOR LIVE WIRES.

Avoid the risk of severe electrical shock by checking for live electrical wires that may be hidden by walls, floors or ceilings. Turn off the breaker switch to ensure there are no live wires.

17. DO NOT OVERREACH.

Keep proper footing and balance at all times. Do not operate the nailer on a scaffold and ladder.

18. **NEVER USE NAILER WHICH IS DEFECTIVE OR OPERATING ABNORMALLY.**
If the Nailer appears to be operating unusually, making strange noises, or otherwise appears defective, stop using it immediately and arrange for repairs by a dealer authorized service center.

19. **TAKE FUEL CELL AND BATTERY OUT OF NAILER WHEN:**
1) doing maintenance and inspection;
2) clearing a jam;
3) it is not in use;
4) leaving work area;
5) moving it to another location;
6) handing it to another person.
Never attempt to clear a jam or repair the Nailer unless you have taken fuel cell and battery out of the Nailer and removed all remaining fasteners from the Nailer.

20. **HANDLE NAILER CORRECTLY.**
Operate the Nailer according to this Manual. Never allow the Nailer to be operated by children, individuals unfamiliar with its operation or unauthorized personnel.

21. **NEVER USE NAILER FOR APPLICATIONS OTHER THAN THOSE SPECIFIED IN THIS MANUAL.**

22. **HANDLE NAILER CAREFULLY.**
Do not drop the Nailer or strike the Nailer against hard surfaces. Handle the Nailer carefully.

23. **MAINTAIN NAILER WITH CARE.**
Keep the Nailer clean and lubricated for better and safer performance.

24. **USE ONLY PARTS, ACCESSORIES OR FASTENERS SUPPLIED OR RECOMMENDED BY DEALER.**
Unauthorized parts, accessories, or fasteners may void your warranty and can lead to malfunction and resulting injuries.
Only service personnel trained by dealer, distributor or employer trained personnel shall repair the Nailer.

25. **NEVER MODIFY OR ALTER A NAILER.** Doing so may cause it to malfunction and personal injuries may result.

FUEL CELL IMPORTANT SAFETY INSTRUCTIONS

DANGER

■ **Fuel cell, fuel and propellant are flammable under pressure.**
Explosion / Fire Hazard

Must follow all instructions otherwise it may result in fire and explosion when handling dispensers for combustible gas for the purpose of storage, transportation, inserting into and taking out of the tool and disposal.

■ **Do not smoke when handling the fuel cell.**

WARNING

Do not inhale its contents.

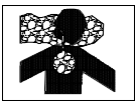

Expanding gases cause low temperatures.
Fluid gases might cause injuries when getting in touch with skin or eyes.
In case of contact with skin ; wash the contact surface carefully with warm water and soap.
In case of contact with eyes ; rinse the open eyes under running water.
Contact a doctor if necessary.

Store in well-ventilated area.
Store under 41°F (5°C) ～77°F （25°C ） (e.g . Do not store under the direct sunlight or in a vehicle).
Do not expose to an open flame and sparks.
Do not puncture or open the fuel cell.
Do not refill, reclaim or recycle the fuel cell.
Dispose of according to local regulations for aerosol products.
Do not dispose of fuel cell with other scrap for recycling.
Keep out of reach of children.

IMPORTANT SAFETY INSTRUCTIONS FOR BATTERY CHARGER

WARNING

Death or serious bodily injury could result from improper or unsafe use of battery chargers. To avoid these risks, follow these basic safety instructions:

READ ALL INSTRUCTIONS

1. This manual contains important safety and operating instructions for battery charger Model 504.4.04.013.XX.

2. Before using battery charger, read all instructions and cautionary markings on (1)nailer,(2) battery charger, (3) battery.

3. To reduce risk of injury, only use rechargeable battery type504.4.04.011.01. Other type of batteries may burst causing personal injury and damage.

4. Do not expose battery charger to rain or snow.

5. Use of an attachment not recommended or sold by the battery charger manufacturer may result in a risk of fire, electric shock, or injury to persons.

6. Make sure cord is located so that it will not be stepped on, tripped over, or otherwise subjected to damage.

7. An extension cord should not be used unless necessary.
   Use of improper extension cord could result in a risk of fire and electric shock.

8. Do not operate battery charger with damaged cord or plug.

9. Do not disassemble battery charger.

10. Please read this Manual before using the battery charger.

IMPORTANT SAFETY INSTRUCTIONS FOR USE OF THE BATTERY AND BATTERY CHARGER

You must charge the battery before you use the Nailer. Before using the model 503.1.16.001.01 battery charger, be sure to read all instructions and cautionary statements on the battery and in this manual.

REMEMBER : ONLY USE BATTERY TYPE:No.503.1.10.001.01.
OTHER TYPES OF BATTERIES MAY BURST AND CAUSE INJURY!
Follow these instructions to avoid the risk of injury:

WARNING

Improper use of the battery or battery charger can lead to serious injury. To avoid these injuries:

1. **DO NOT** disassemble the battery.
2. **DO NOT** incinerate the battery.
3. **DO NOT** short-circuit the battery.
4. **DO NOT** insert any objects into the battery charger's air vents. Electric shock or damage to the battery charger may result.
5. **DO NOT** charge outdoors. Keep the battery away from direct sunlight and use only where there is low humidity and good ventilation.
6. **DO NOT** charge when the temperature is below 50°F (10°C) or above 104°F (40°C).
7. **DO NOT** connect two battery chargers together.
8. **DO NOT** insert foreign objects into the hole for the battery or the battery charger.
9. **DO NOT** use a booster transformer when charging.
10. **DO NOT** store the battery or battery charger in places where the temperature may reach or exceed 104°F (40°C).

DISPOSAL OF THE BATTERY

WARNING

Dispose of damaged or worn out batteries according to local recycling or refuse rules.

SPECIFICATION

1. GAS INSULATION NAILER

TYPE	IP50D
Type of power	Piston reciprocating
Applicable nails	See 2. Available Nails.
Nail Capacity	1 nails
Ambient temperature	-5 ℃～ 50℃(23℉to 120℉)
Dimensions	18.30 " （L）×14.55 " （H）×4.80 " （W） 465mm（L）×370mm （H）×122mm （W）
Weight	8.2lbs. （3.7kg Include battery ）
Cycle Rate	1 nails/second
Battery Pack	NiMH 7.2V

2. Available Nails

Insulation fasteners

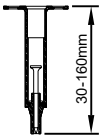

WARNING

Be sure to use only the genuine dealer nails as the above sizes. The use of any other nails can result in tool malfunction or nail breakdown, leading to serious injuries.

Only nails shown in the above table can be driven with this Nailer.

3. Fuel cell

Fuel Cell	Sold Separately, Specification as below: 1 ）Φ31.5mm x 165mm Pressure 16 ～18 bar, Using temperature range: 23 ℉（-5℃）～120℉（50℃） Model No: FC165-1-1
	2 ）Φ31.5mm x 165mm Pressure 10.8 ～11.8 bar, Using temperature range: 23 ℉（-5℃）～120℉（50℃） Model No: FC165-2-1

4. Charger

Input power source	AC110 ～240V / 50 ～60Hz
Charge time	About 60minutes
Charging voltage	DC 12V
Charging current	DC 0.8A
Charger Weight	0.15Kg
Adapter Weight	0.085Kg

GENERAL OPERATION MANUAL

NOTE:

The information contained in this Manual is designed to assist you in the safe operation of the Nailer. Some illustrations in this Manual may show details or attachments that differ from those on your own Nailer.

NAME OF PARTS

1. Gas Insulation Nailer (MODEL: IP50D)

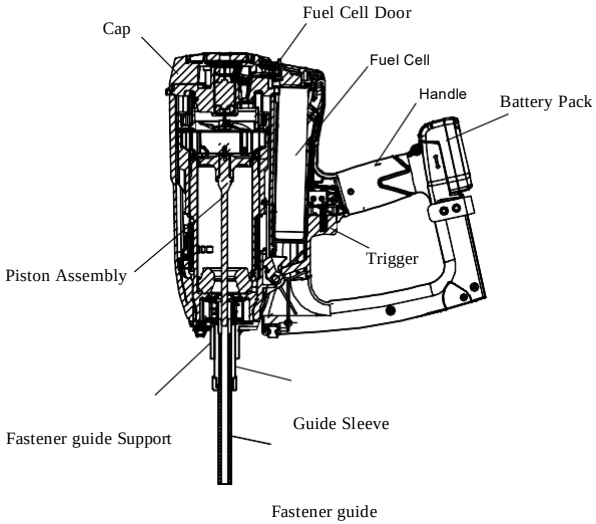

2. **Battery Pack(503.1.10.001.02)**

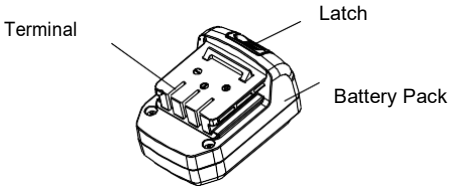

3. **Battery Charger(503.1.16.001.02)** (include Adapter and Charger Base)

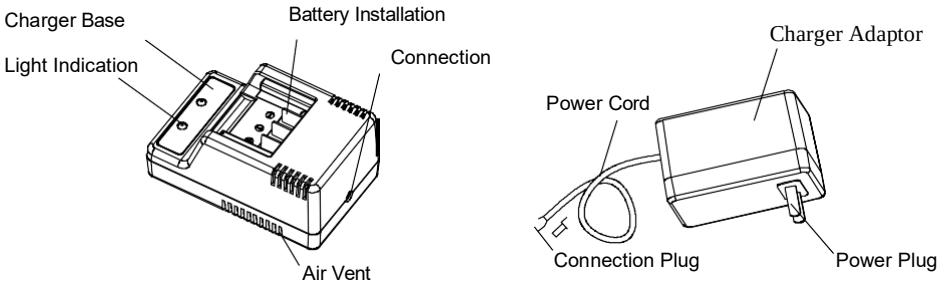

4. Accessories

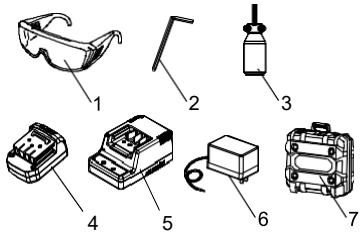

DANGER

Accessories other than those shown below canlead to malfunction and resulting injuries.

STANDARD ACCESSORIES

1.Safety Glasses .....
2.Wrench M5 .....
3.lubricating oil .....
4.Battery Pack .....
5.Charger Base .....
6.Charger Adaptor .....
7.Blow Case Assembly .....

OPTIONAL ACCESSORIES

sold separately

1.Fuel Cell

2.Cleaner

REMOVAL AND INSTALLATION METHOD OF BATTERY

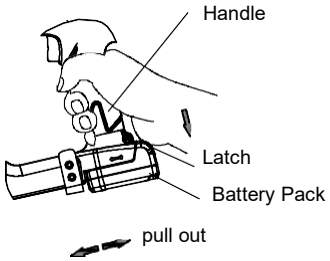

1. How to install the battery
   Align the battery with the groove in tool handle and slip it into place. Always insert it all the way until it locks in place with a little click. If not, it may accidentally fall out of the tool, causing injury to you or someone around you.
2. How to remove the battery
   Withdraw battery from the tool handle while pressing top button on the battery.

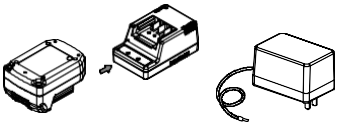

STEP:

1. Insert the battery into the charger base. Make sure it contacts the bottom of the charger base.
2. Insert the connection plug of adapter into the receptacle of the charge base.
3. Insert the power plug of the adapter into the plug seat.
4. Charging

■ When the charger adapter has been inserted into the plug seat , charging will commence and the red & green pilot lamp will light up together.

■ When done charging, the red light will turn off and only green light will be on.

NOTE: The battery charging time becomes longer when a temperature is low or the voltage of the power source is too low.

5. Disconnect battery charger from the power plug.

CAUTION

■ **If the battery is recharged when it is warm due to battery use or exposure to sunlight, the pilot lamp may not light. The battery will not be recharged. In such a case, let the battery cool before charging.**

BEFORE OPERATION

Read section titled “SAFETY”

Make sure of the followings before operation.

WORKING ENVIRONMENT

WARNING

- No flammable gas, liquid or other flammable objects at worksite.
- Use outside or well- ventilated areas. Do not inhale.

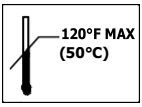

- Keep the Nailer, fuel cell and battery away from sunshine and from temperature exceeding 120°F (50°C).
- Keep away from ignition sources. No smoking.

- Clear the area of children or unauthorized personnel.

COLD WEATHER CARE

- Do not store the Nailer, fuel cell and battery in a cold weather environment. Keep the Nailer, fuel cell and battery in a warm area until beginning the work.
- If the Nailer, fuel cell and battery are already cold, bring it in a warm area and allow the Nailer to warm up before use. Observe temperature limit of max. 120°F (50°C).
  Do not expose to an open flame and sparks!

CAUTION

- This Nailer may not drive completely when:
  at low temperature fuel cell may lose the required propellant force;
  or at high temperature.
- Do not use the Nailer in the rain or where excessive moisture is present.

PREPARING THE FUEL CELL

Read section titled “FUEL CELL IMPORTANT SAFETY INSTRUCTIONS ”

DANGER

- The fuel cell is flammable.
- Keep away from ignition sources.

- **Do not spray into flame or any incandescent material.**
- **Do not smoke when handling fuel cell.**

- **Keep stem of fuel cell away from face or skin. Expanding gases cause low temperatures.**
- **Do not inhale.**
- **Keep out of reach of children.**

CAUTION

- **If the gas leaks from the metering valve or the gas cartridge after attaching the metering valve, replace with the new metering valve.**
- **Do not attempt to reuse the metering valve. Replace with the new metering valve.**
  To attach the metering valve to a fuel cell:

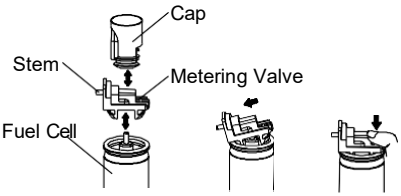

(1) Separate the metering valve and the cap from the gas cartridge.

(2) Stem downward, put the metering valve inclined forward to the bowl cover.

(3) Press downward on the rear of the metering valve until it seals, no gas leakage.

Check the metering valve:

Press the metering valve stem on fuel cell two or three times against a stationary object and release.

If gas is not dispersed, fuel cell is empty.

TESTING THE NAILER

DANGER

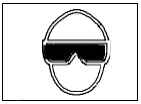

Operators and others in work area MUST wear safety glasses with side shields.

WARNING

Never use Nailer unless push lever is operating properly.

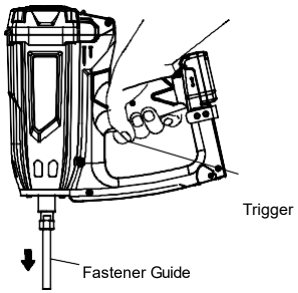

(2) Installing the battery.

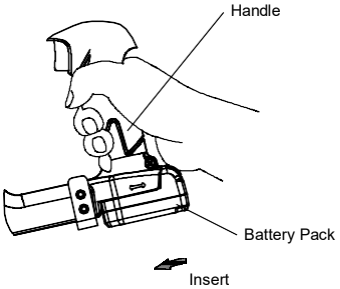

Make sure the battery indicator light is flashing green. If the battery indicator light is flashing red, the battery doesn't have enough power and it needs to be charged.

BATTERY INDICATOR LIGHT

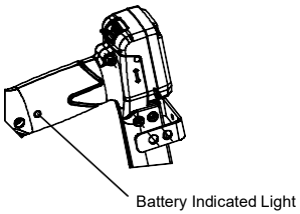

Flashing GREEN: Enough power remaining
(The light turns steady during operation).
Flashing RED: Insufficient power remaining
(The light turns steady during operation).

(3) INSERT FUEL CELL INTO NAILER.

① Pulling the latch and open the cell cover.

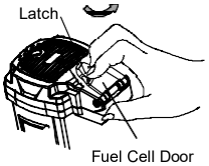

② Insert the fuel cell into nailer.

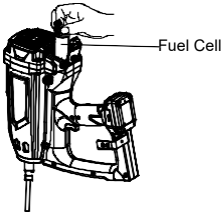

③ Insert the stem of fuel cell into the hole of adaptor.

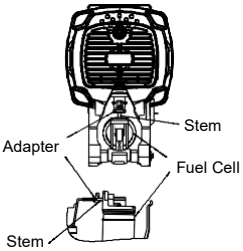

④ Close the fuel cell door.

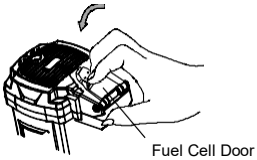

⑤ Lock up the latch.

MAINTENANCE

NOTE:

- The information contained in this Manual is designed to assist you in the safe maintenance of the Nailer.
- Some illustrations in this Manual may show details or attachments that differ from those on your own Nailer.

MAINTENANCE AND INSPECTION

Read section titled “SAFETY”.

DANGER

- **Never use and test in presence of flammable liquids or gases.**
- **Keep away from ignition source.**

- **No smoking.**

Note After completion of each cleaning, drip the lubricating oil (504.6.03.001.01) into the nailer, which is shown in attachment Gas Insulation Nailer Cleaning Guide .

If you have any questions about of the cleaning operating procedures and methods, please contact with dealer authorized service center.

WARNING

1. Daily cleaning

Users must regularly clean the nailer.,Remove the internal accumulation of,carbon and dust to ensure the normal operation.

Follow the attachment Gas Concrete Nailer Cleaning Guide.

2. Storing

DANGER

- **Store Nailer properly with nails, fuel cell and battery removed .**
- **The fuel cell is an aerosol dispensers with flammable contents.**
- **When not in use, the Nailer, fuel cell and battery should be stored in tool case and in a dry place and below temperature 122°F (50°C).**
- **Store indoors at temperature 41°F (5°C) ～77°F（25°C）.**
- When not in use for an extended period, apply a thin coat of the lubricant to the steel parts to avoid rust.
- Do not store the Nailer / fuel cell and battery in a cold weather environment.

EXPLODED DRAWING AND PARTS LIST
GAS INSULATION NAILER
MODEL: IP50D

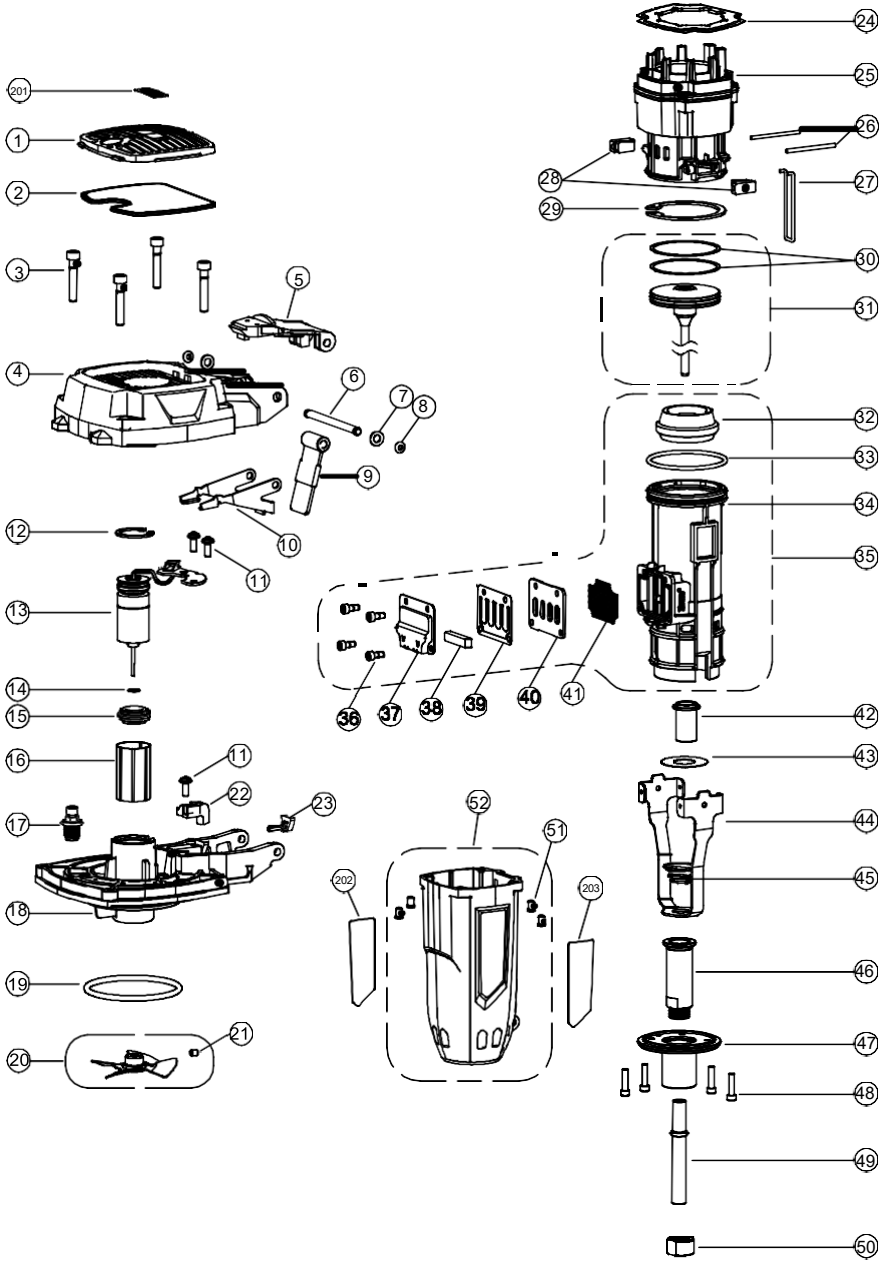

EXPLODED DRAWING AND PARTS LIST
GAS INSULATION NAILER
MODEL: IP50D

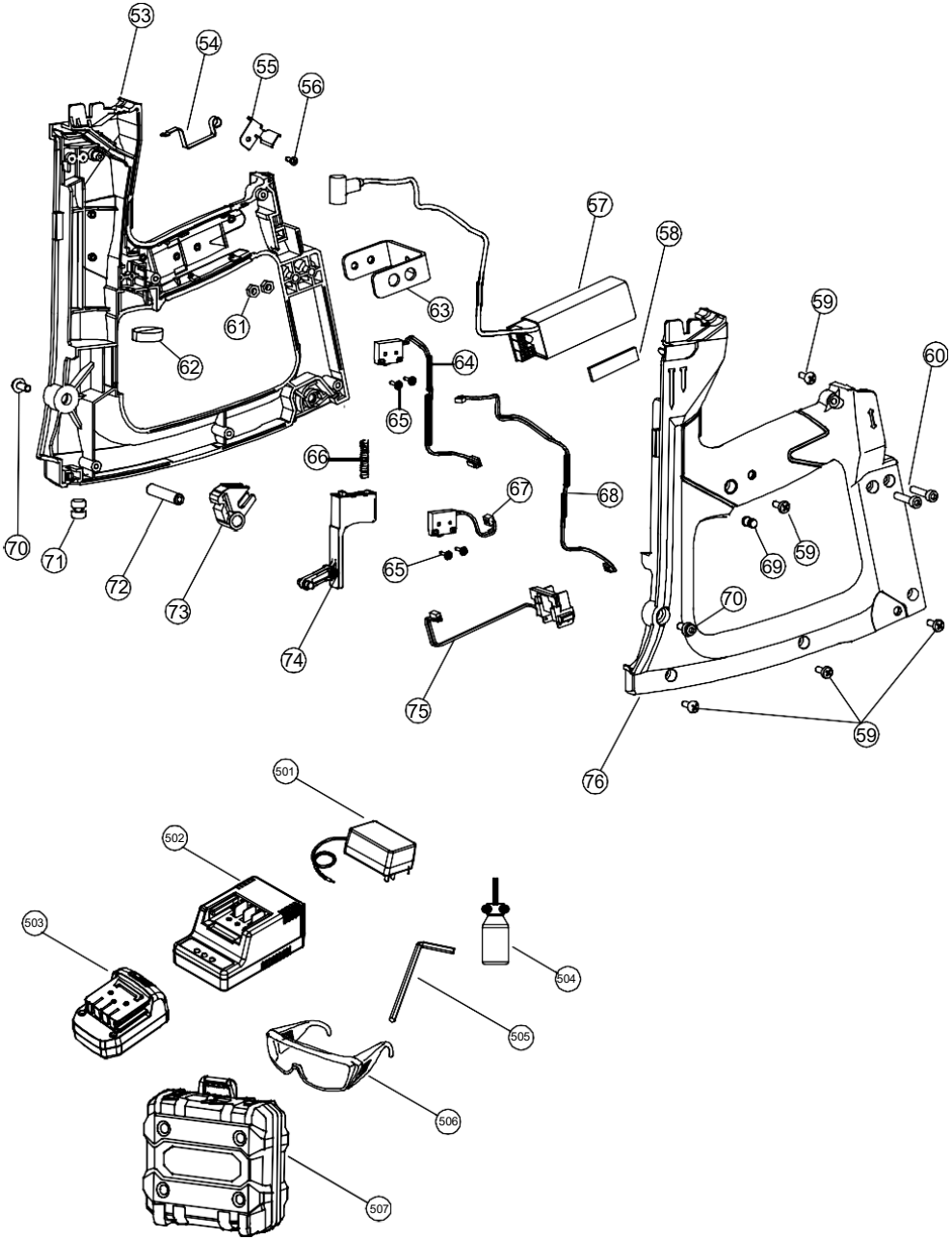

PART LIST GSN50D

Note: ★Wearing parts

No.	Parts Name	Qty	
1	Grille	1	
2	Filter	1	
3	ScrewM5 x30	4	
4	Cap	1	
5	Fuel Cell Door	1	
6	Cap Shaft	1	
7	Washer d=5	2	
8	O-Retaining Ring 3.5 x2	2	
9	Fuel Rubber	1	
10	Fuel Dosing Lever	1	
11	Screw M4x10	3	
12	Retaining Ring d0=24	1	
13	Motor Assembly	1	
14	Anti-dust Plate	1	
15	Motor Rubber Gasket	1	
16	Motor Sleeve	1	
17	Spark Plug	1	
18	Cylinder Head	1	
19	O- Ring φ59.92 xd3.53	1	★
20	Fan Blade Assembly	1	
21	Screw M4 x5	1	
22	Bracket	1	
23	Fuel Cell Adaptor	1	★
24	Air Dam	1	
25	Combustion Chamber Assembly	1	
26	Parallel Pinφ 4 x60	2	
27	Lock Bar	1	
28	Rubber Stop	2	
29	Retaining Ring d0=62	1	
30	Piston Ring 60 x0.8	2	★
31	Piston Assembly	1	
32	Bumper	1	
33	O-Ring 70 x d3.53	1	
34	Cylinder	1	
35	Cylinder Assembly	1	
36	Screw M5 x12	4	
37	Muffler Cover	1	
38	Muffler	1	
39	Reed Valve	1	★
40	Reed Plate	1	
41	Exhaust Baffle	1	
42	Cage Sleeve	1	
43	Spring Washer 0.5mm	1	
44	Cage Spring d=1.6mm	1	
45	Cage	1	
46	Guide Sleeve	1	
47	Fastener Guide Support	1	
48	Screw M5 x20	4	
49	Fastener Guide	1	
50	Nut M18	1	

No.	Parts Name	Qty	
51	Nut M5	4	
52	Housing	1	
53	Right Side Handle	1	
54	Trigger Spring Plate	1	
55	Wire Clip	1	
56	Screw ST2.9x8	1	
57	Spark Unit Assembly	1	
58	Sponge Bumper	1	
59	Screw ST4.2 x20	5	
60	Screw M5 x25	2	
61	Nut M5	2	
62	Fuel Cell Bumper	1	
63	Hanger	1	
64	Fan Switch Assembly	1	
65	Screw ST2.2 x11	4	
66	Trigger Spring	1	
67	Ignition Switch Assembly	1	
68	Motor Connection Wire Assembly	1	
69	LED Light	1	
70	Screw M5x10	2	
71	Rubber Column	1	
72	Rotating Shaft	1	
73	Rotating Block	1	
74	Trigger	1	
75	Power Circuit Assembly	1	
76	Left Side Handle	1	
201	Cap Label	1	
202	Specification Label	1	
203	Logo Label	1	
501	Charger Adaptor	1	
502	Charger Base	1	
503	Battery Pack	2	
504	Iubricating Oil	1	
505	Wrench M5	2	
506	Safety Glasses	1	
507	Blow Case Assembly	1	

FOR WARRANTY INFO, TOOL REPAIR, OR GENERAL QUESTIONS
Contact us at:
(web) www.thermalgriptools.com
(email) wallssales@trufast.com
(phone) 616-454-3100